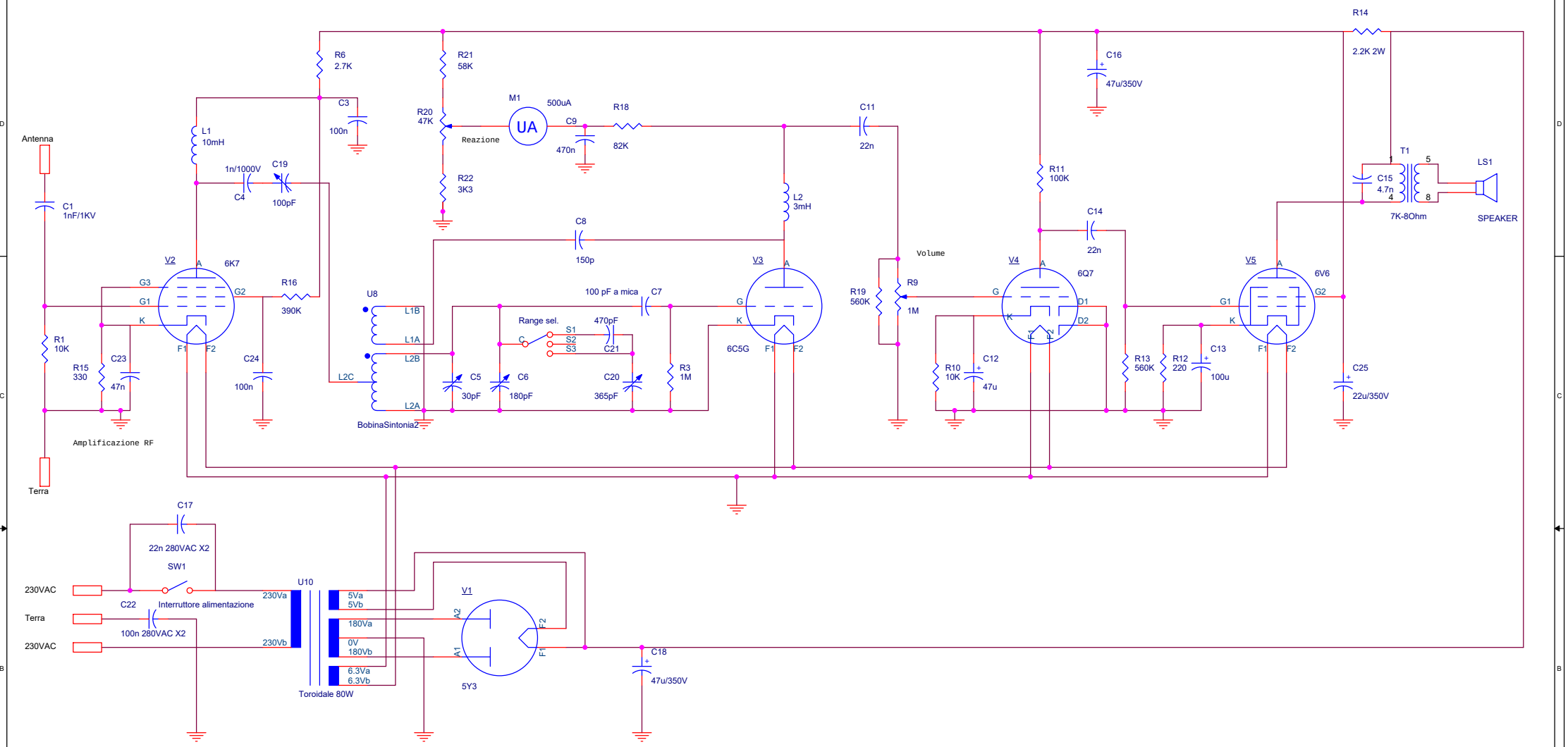

Title	Radio 5 valvole octal in reazione . Revisione 2	
Size A3	Document Number 001	Rev 2
Date: Sunday, May 27, 2018	Sheet 1 of 1	